ARCHIEF DOCUMENTATIECENTRUM NVHR
Ned. Ver. v. Historie v/d Radio

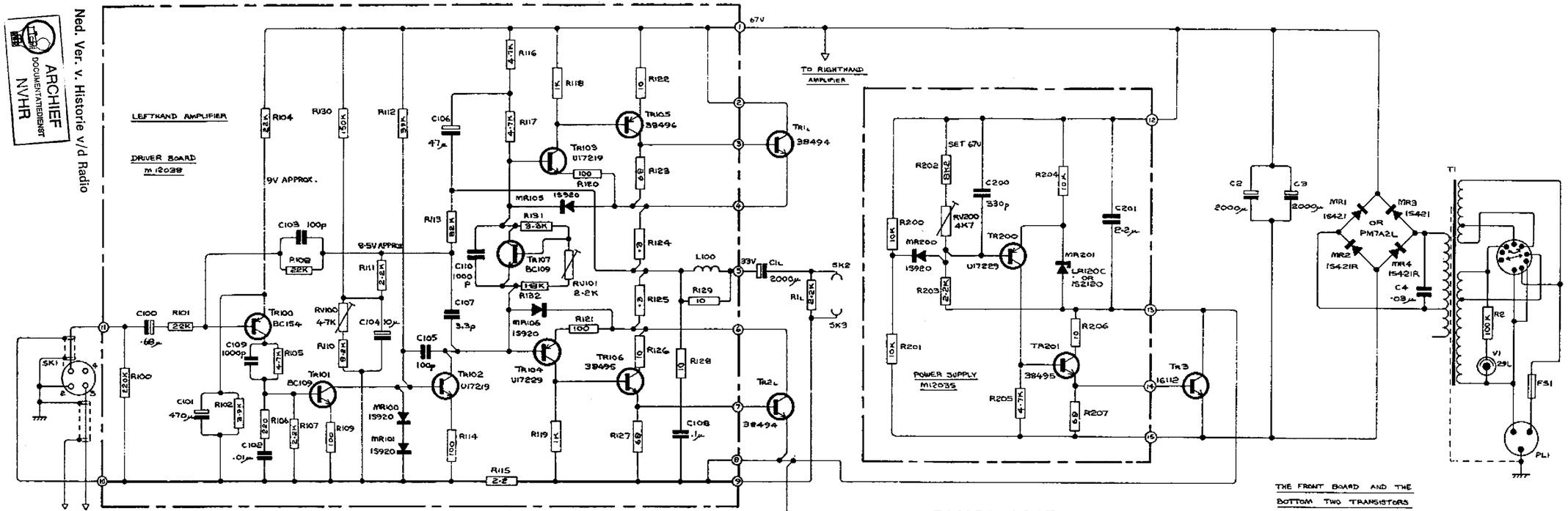

ALTERNATIVE TRANSISTOR TYPES
BC154 — BC214C
U17219 — ZTX304, MPS.A06
E5457, BC682
U17229 — ZTX504, MPS.A56
E5458

THE RIGHTHAND AMPLIFIER IS IDENTICAL TO THE LEFTHAND AMPLIFIER

THE FRONT BOARD AND THE BOTTOM TWO TRANSISTORS ON THE HEAT SINK ARE THE LEFTHAND CHANNEL

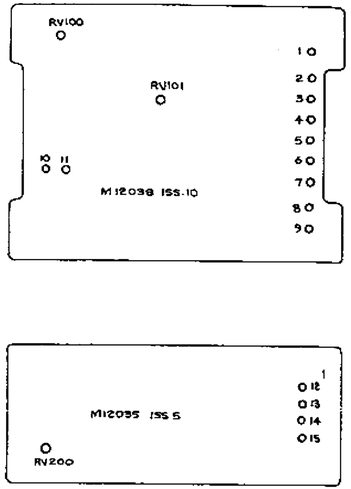

BOARDS VIEWED FROM COPPER SIDE

Issue	Date	Modification
No 2.	4·9·70	REDRAWN
No 3	13·12·73	

Drawn	RKM	3·9·70
Traced	RKM	3·9·70
Checked	RR	4·9·70
Approved		

QUAD — The Acoustical Mfg Co. Ltd. Huntingdon England.

QUAD 303
CIRCUIT DIAGRAM
(ABOVE SERIAL No 11500)

M12160